Unitrode Products
from Texas Instruments

application INFO available

UC1823
UC2823
UC3823

High Speed PWM Controller

FEATURES

- Compatible with Voltage or Current-Mode Topologies
- Practical Operation @ Switching Frequencies to 1.0MHz
- 50ns Propagation Delay to Output
- High Current Totem Pole Output (1.5A peak)
- Wide Bandwidth Error Amplifier
- Fully Latched Logic with Double Pulse Suppression
- Pulse-by-Pulse Current Limiting
- Soft Start/Max. Duty Cycle Control
- Under-Voltage Lockout with Hysteresis
- Low Start Up Current (1.1mA)
- Trimmed Bandgap Reference (5.1V ±1%)

DESCRIPTION

The UC1823 family of PWM control ICs is optimized for high frequency switched mode power supply applications. Particular care was given to minimizing propagation delays through the comparators and logic circuitry while maximizing bandwidth and slew rate of the error amplifier. This controller is designed for use in either current-mode or voltage-mode systems with the capability for input voltage feed-forward.

Protection circuitry includes a current limit comparator, a TTL compatible shutdown port, and a soft start pin which will double as a maximum duty cycle clamp. The logic is fully latched to provide jitter free operation and prohibit multiple pulses at the output. An under-voltage lockout section with 800mV of hysteresis assures low start up current. During under-voltage lockout, the output is high impedance. The current limit reference (pin 11) is a DC input voltage to the current limit comparator. Consult specifications for details.

These devices feature a totem pole output designed to source and sink high peak currents from capacitive loads, such as the gate of a power MOSFET. The on state is defined as a high level.

ABSOLUTE MAXIMUM RATINGS

Supply Voltage (Pins 15, 13) 30V
Output Current, Source or Sink (Pin14)
  DC 0.5A
  Pulse (0.5µs) 2.0A
Analog Inputs (Pins 1, 2, 7, 8, 9, 11) . . . . . –0.3V to +6V
Clock Output Current (Pin 4) . . . . . –5mA
Error Amplifier Output Current (Pin 3) 5mA
Soft Start Sink Current (Pin 8) 20mA
Oscillator Charging Current (Pin 5) . . . . . –5mA
Power Dissipation at T_A = 60 °C 1W
Storage Temperature Range . . . . . –65°C to +150°C
Lead Temperature (Soldering, 10 seconds) . . . . . 300°C

Note: All voltages are with respect to ground, Pin 10.
Currents are positive into the specified terminal.
Consult Packaging Section of Databook for thermal limitations

BLOCK DIAGRAM

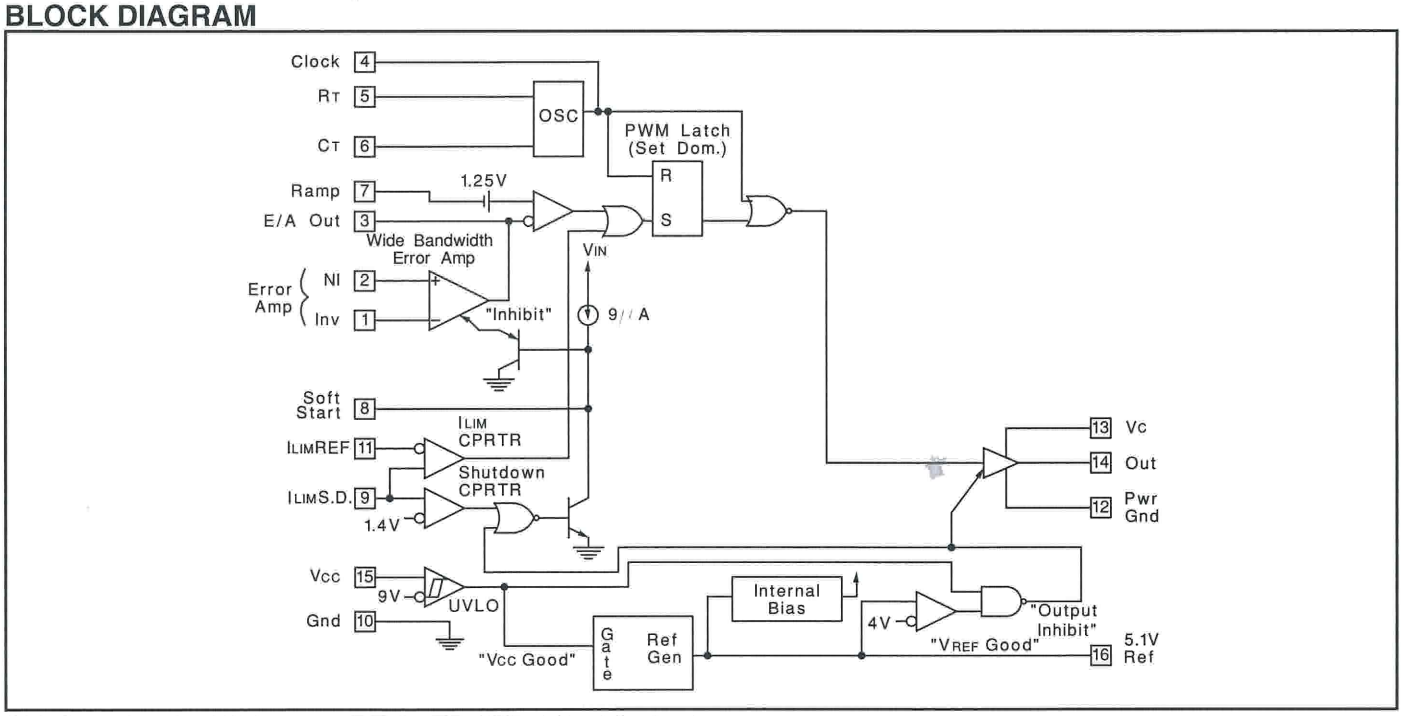

CONNECTION DIAGRAMS

DIL-16, SOIC-16 (TOP VIEW)
J or N, DW Package

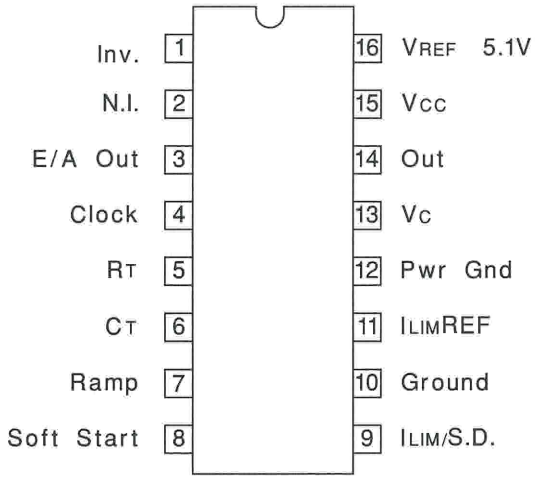

PLCC-20, LCC-20 (TOP VIEW)
Q, L Package

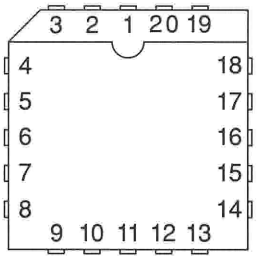

PACKAGE PIN FUNCTION	
FUNCTION	PIN
N/C	1
Inv.	2
N.I.	3
E/A Out	4
Clock	5
N/C	6
RT	7
CT	8
Ramp	9
Soft start	10
N/C	11
ILIM/S.D.	12
Ground	13
ILIM REF	14
PWR Gnd	15
N/C	16
VC	17
OUT	18
VCC	19
VREF 5.1V	20

THERMAL PACKAGING INFORMATION

PACKAGE	θ_{JA}	θ_{JC}
J-16	80 - 120	28 (Note2)
N-16	90 (Note1)	45
DW-16	45 - 90 (Note1)	25
PLCC-20 Q Package	43 - 75 (Note1)	34
LCC-20 LPackage	70 - 80	20 (Note2)

Note 1. Specified θ_{JA} (junction to ambient) is for devices mounted to 5-in-2 FR4 PC board with one ounce copper where noted. When resistance range is given, lower values are for 5-in-2 aluminum PC board. Test PWB was 0.062 in thick and typically used 0.635 mm trace widths for power pkgs and 1.3 mm trace widths for non-power pkgs with a 100 x 100 mil probe land area at the end of each trace.
Note 2. θ_{JC} data values stated were derived from MIL-STD-1835B. MIL-STD-1835B states that "The baseline values shown are worst case (mean + 2s) for a 60 x 60 mil microcircuit device silicon die and applicable for devices with die sizes up to 14400 square mils. For device die sizes greater than14400 square mils use the following values; dual-in-line, 11°C/W; flat pack, 10°C/W; pin grid array, 10°C/W"

ELECTRICAL CHARACTERISTICS: Unless otherwise noted, these specifications apply for R_T = 3.65k, C_T = 1nF, V_{CC} = 15V, 0°C < T_A < +70°C for the UC3823, -25°C < T_A < +85°C for the UC2823, and -55°C < T_A < +125°C for the UC1823, T_A = T_J.

PARAMETER	TEST CONDITIONS	UC1823 UC2823			UC3823			UNITS
		MIN	TYP	MAX	MIN	TYP	MAX	
Reference Section								
Output Voltage	T_J = 25°C, I_O = 1mA	5.05	5.10	5.15	5.00	5.10	5.20	V
Line Regulation	10 < V_{CC} < 30V		2	20		2	20	mV
Load Regulation	1 < I_O < 10mA		5	20		5	20	mV
Temperature Stability*	T_{MIN} < T_A < T_{MAX}		0.2	0.4		0.2	0.4	mV/°C
Total Output Variation*	Line, Load, Temp.	5.00		5.20	4.95		5.25	
Output Noise Voltage*	10Hz < f < 10kHz		50			50		µV
Long Term Stability*	T_J = 125°C, 1000 hrs.		5	25		5	25	mV
Short Circuit Current	V_{REF}=0V	-15	-50	-100	-15	-50	-100	mA
Oscillator Section								
Initial Accuracy*	T_J=25°C	360	400	440	360	400	440	kHz
Voltage Stability*	10 < V_{CC} < 30V		0.2	2		0.2	2	%
Temperature Stability*	T_{MIN} <T_A < T_{MAX} (UC1823)		12					%
	T_{MIN} <T_A < T_{MAX} (UC2823)		5					%
	T_{MIN} <T_A < T_{MAX} (UC3823)					5		%
Total Variation*	Line, Temp.	340		460	340		460	kHz
Clock Out High		3.9	4.5		3.9	4.5		V
Clock Out Low			2.3	2.9		2.3	2.9	V
Ramp Peak*		2.6	2.8	3.0	2.6	2.8	3.0	V
Ramp Valley*		0.7	1.0	1.25	0.7	1.0	1.25	V
Error Amplifier Section								
Input Offset Voltage				10			15	mV
Input Bias Current			0.6	3		0.6	3	µA
Input Offset Current			0.1	1		0.1	1	µA
Open Loop Gain	1 < V_O < 4V	60	95		60	95		dB
CMRR	1.5 < V_{CM} < 5.5V	75	95		75	95		dB
PSRR	10 < V_{CC} < 30V	85	110		85	110		dB
Output Sink Current	$V_{PIN\ 3}$ =1V	1	2.5		1	2.5		mA
Output Source Current	$V_{PIN\ 3}$ = 4V	-0.5	-1.3		-0.5	-1.3		mA
Output High Voltage	$I_{PIN\ 3}$ = –0.5mA	4.0	4.7	5.0	4.0	4.7	5.0	V
Output Low Voltage	$I_{PIN\ 3}$ = 1mA	0	0.5	1.0	0	0.5	1.0	V
Unity Gain Bandwidth*		3	5.5		3	5.5		MHz
Slew Rate*		6	12		6	12		V/µS
Ramp Valley to Peak*		1.6	1.8	2.0	1.6	1.8	2.0	V

* These parameters are ensured by design but not 100% tested in production.

ELECTRICAL CHARACTERISTICS: Unless otherwise noted, these specifications apply for R_T = 3.65k, C_T = 1nF, V_{CC} = 15V, 0°C < T_A < +70°C for the UC3823, -25°C < T_A < +85°C for the UC2823, and -55°C < T_A < +125°C for the UC1823, T_A = T_J.

PARAMETER	TEST CONDITIONS	UC1823 UC2823			UC3823			UNITS
		MIN	TYP	MAX	MIN	TYP	MAX	
PWM Comparator Section								
Pin 7 Bias Current	$V_{PIN\ 7}$ = 0V		-1	-5		-1	-5	µA
Duty Cycle Range		0		80	0		85	%
Pin 3 Zero D.C. Threshold	$V_{PIN\ 7}$ = 0V	1.1	1.25		1.1	1.25		V
Delay to Output*			50	80		50	80	ns
Soft-Start Section								
Charge Current	$V_{PIN\ 8}$ = 0.5V	3	9	20	3	9	20	µA
Discharge Current	$V_{PIN\ 8}$ = 1V	1			1			mA
Current Limit/Shutdown Section								
Pin 9 Bias Current	0 < $V_{PIN\ 9}$ < 4V			±10			±10	µA
Current Limit Offset	$V_{PIN\ 11}$ = 1.1V			15			15	mV
Current Limit Common Mode Range ($V_{PIN\ 11}$)		1.0		1.25	1.0		1.25	V
Shutdown Threshold		1.25	1.40	1.55	1.25	1.40	1.55	V
Delay to Output*			50	80		50	80	ns
Output Section								
Output Low Level	I_{OUT} = 20mA		0.25	0.40		0.25	0.40	V
	I_{OUT} = 200mA		1.2	2.2		1.2	2.2	V
Output High Level	I_{OUT} = –20mA	13.0	13.5		13.0	13.5		V
	I_{OUT} = –200mA	12.0	13.0		12.0	13.0		V
Collector Leakage	V_C = 30V		100	500		100	500	µA
Rise/Fall Time*	C_L = 1nF		30	60		30	60	ns
Under-Voltage Lockout Section								
Start Threshold		8.8	9.2	9.6	8.8	9.2	9.6	V
UVLO Hysteresis		0.4	0.8	1.2	0.4	0.8	1.2	V
Supply Current								
Start Up Current	V_{CC} = 8V		1.1	2.5		1.1	2.5	mA
I_{CC}	$V_{PIN\ 1}$, $V_{PIN\ 7}$, $V_{PIN\ 9}$ =0V, $V_{PIN\ 2}$ = 1V		22	33		22	33	mA

* These parameters are ensured by design but not 100% tested in production.

UC1823 PRINTED CIRCUIT BOARD LAYOUT CONSIDERATIONS

High speed circuits demand careful attention to layout and component placement. To assure proper performance of the UC1823, follow these rules. 1) Use a ground plane. 2) Damp or clamp parasitic inductive kick energy from the gate of driven MOSFET. Don't allow the output pins to ring below ground. A series gate resistor or a shunt 1 Amp Schottky diode at the output pin will serve this purpose. 3) Bypass V_{CC}, V_C, and V_{REF}. Use 0.1µF monolithic ceramic capacitors with low equivalent series inductance. Allow less than 1 cm of total lead length for each capacitor between the bypassed pin and the ground plane. 4) Treat the timing capacitor, C_T, like a bypass capacitor.

ERROR AMPLIFIER CIRCUIT

Simplified Schematic

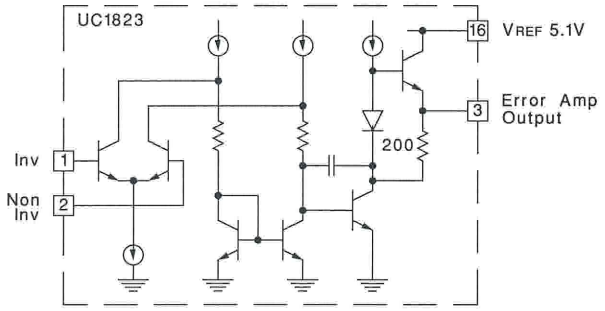

Open Loop Frequency Response

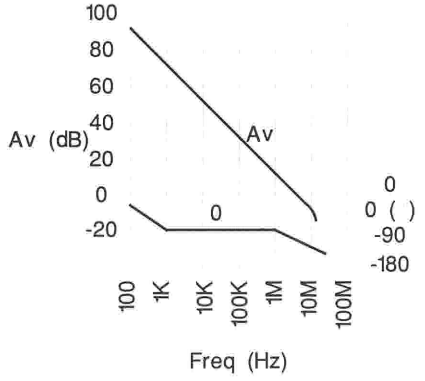

Unity Gain Slew Rate

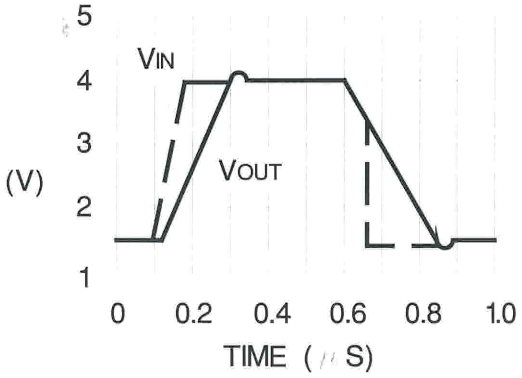

PWM APPLICATIONS

Conventional (Voltage Mode)

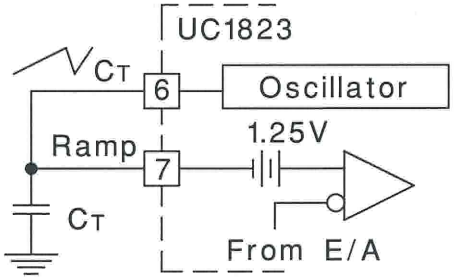

Current-Mode

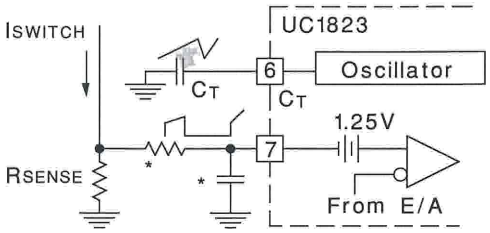

* A small filter may be required to suppress switch noise

OSCILLATOR CIRCUIT

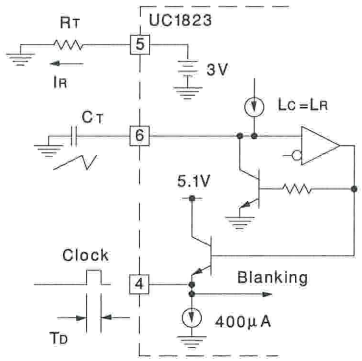

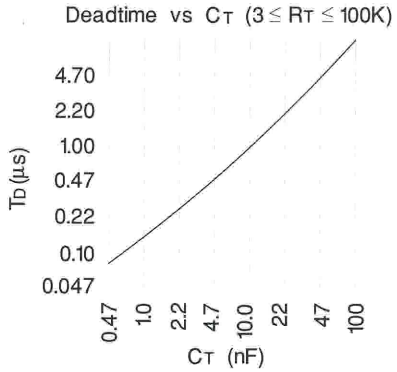

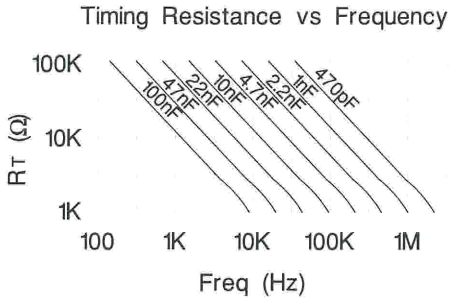

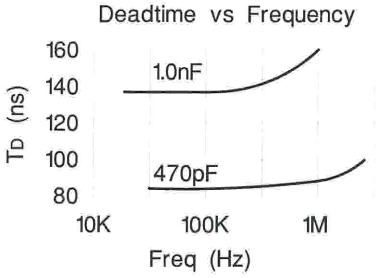

SYNCHRONIZED OPERATION

Two Units in Close Proximity

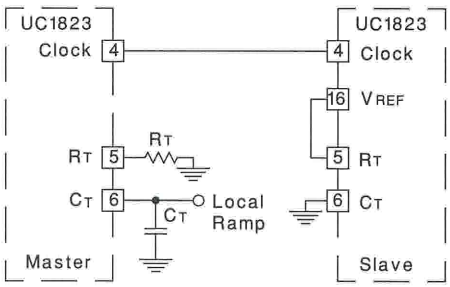

Generalized Synchronization

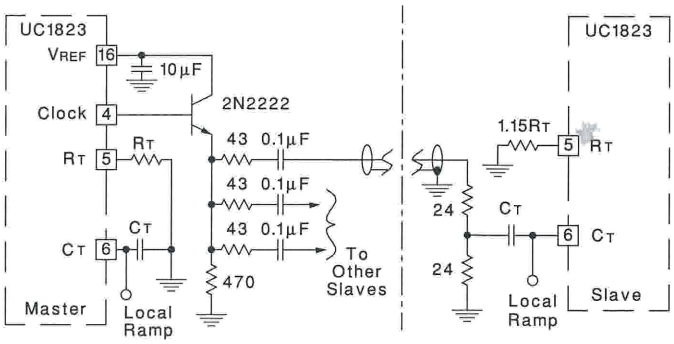

CONSTANT VOLT-SECOND CLAMP CIRCUIT

The circuit shown here will achieve a constant volt-second product clamp over varying input voltages. The ramp generator components, R_T and C_R are chosen so that the ramp at Pin 9 crosses the 1V threshold at the same time the desired maximum volt-second product is reached. The delay through the inverter must be such that the ramp capacitor can be completely discharged during the minimum deadtime.

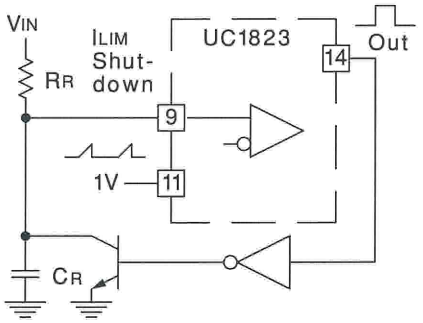

OUTPUT SECTION

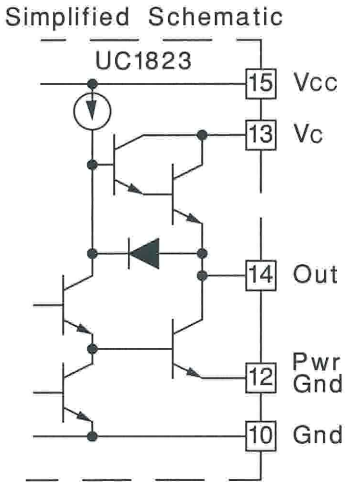

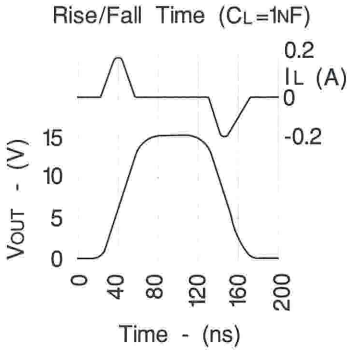

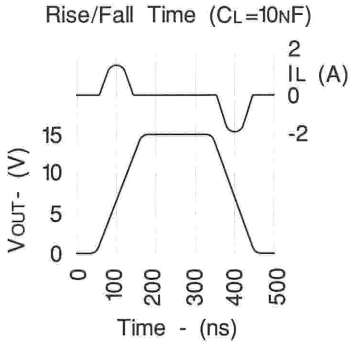

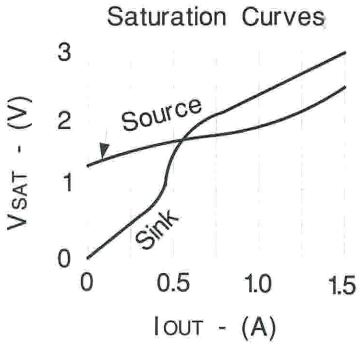

FEED FORWARD TECHNIQUE FOR OFF-LINE VOLTAGE MODE APPLICATION

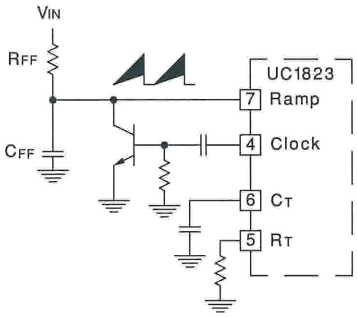

PACKAGING INFORMATION

Orderable Device	Status (1)	Package Type	Package Drawing	Pins	Package Qty	Eco Plan (2)	Lead/ Ball Finish	MSL Peak Temp (3)	Samples (Requires Login)
5962-89905012A	ACTIVE	LCCC	FK	20	1	TBD	Call TI	Call TI	
5962-8990501EA	ACTIVE	CDIP	J	16	1	TBD	Call TI	Call TI	
UC1823J	ACTIVE	CDIP	J	16	1	TBD	A42	N / A for Pkg Type	
UC1823J883B	ACTIVE	CDIP	J	16	1	TBD	A42	N / A for Pkg Type	
UC1823L	ACTIVE	LCCC	FK	20	1	TBD	POST-PLATE	N / A for Pkg Type	
UC1823L883B	ACTIVE	LCCC	FK	20	1	TBD	POST-PLATE	N / A for Pkg Type	
UC2823DW	ACTIVE	SOIC	DW	16	40	Green (RoHS & no Sb/Br)	CU NIPDAU	Level-2-260C-1 YEAR	
UC2823DWG4	ACTIVE	SOIC	DW	16	40	Green (RoHS & no Sb/Br)	CU NIPDAU	Level-2-260C-1 YEAR	
UC2823DWTR	ACTIVE	SOIC	DW	16	2000	Green (RoHS & no Sb/Br)	CU NIPDAU	Level-2-260C-1 YEAR	
UC2823DWTRG4	ACTIVE	SOIC	DW	16	2000	Green (RoHS & no Sb/Br)	CU NIPDAU	Level-2-260C-1 YEAR	
UC2823N	ACTIVE	PDIP	N	16	25	Green (RoHS & no Sb/Br)	CU NIPDAU	N / A for Pkg Type	
UC2823NG4	ACTIVE	PDIP	N	16	25	Green (RoHS & no Sb/Br)	CU NIPDAU	N / A for Pkg Type	
UC2823QTR	ACTIVE	PLCC	FN	20	1000	Green (RoHS & no Sb/Br)	CU SN	Level-2-260C-1 YEAR	
UC2823QTRG3	ACTIVE	PLCC	FN	20	1000	Green (RoHS & no Sb/Br)	CU SN	Level-2-260C-1 YEAR	
UC3823DW	ACTIVE	SOIC	DW	16	40	Green (RoHS & no Sb/Br)	CU NIPDAU	Level-2-260C-1 YEAR	
UC3823DWG4	ACTIVE	SOIC	DW	16	40	Green (RoHS & no Sb/Br)	CU NIPDAU	Level-2-260C-1 YEAR	
UC3823DWTR	ACTIVE	SOIC	DW	16	2000	Green (RoHS & no Sb/Br)	CU NIPDAU	Level-2-260C-1 YEAR	
UC3823DWTRG4	ACTIVE	SOIC	DW	16	2000	Green (RoHS & no Sb/Br)	CU NIPDAU	Level-2-260C-1 YEAR	
UC3823N	ACTIVE	PDIP	N	16	25	Green (RoHS & no Sb/Br)	CU NIPDAU	N / A for Pkg Type	

Orderable Device	Status (1)	Package Type	Package Drawing	Pins	Package Qty	Eco Plan (2)	Lead/ Ball Finish	MSL Peak Temp (3)	Samples (Requires Login)
UC3823NG4	ACTIVE	PDIP	N	16	25	Green (RoHS & no Sb/Br)	CU NIPDAU	N / A for Pkg Type	
UC3823Q	ACTIVE	PLCC	FN	20	46	Green (RoHS & no Sb/Br)	CU SN	Level-2-260C-1 YEAR	
UC3823QG3	ACTIVE	PLCC	FN	20	46	Green (RoHS & no Sb/Br)	CU SN	Level-2-260C-1 YEAR	
UC3823QTR	ACTIVE	PLCC	FN	20	1000	Green (RoHS & no Sb/Br)	CU SN	Level-2-260C-1 YEAR	
UC3823QTRG3	ACTIVE	PLCC	FN	20	1000	Green (RoHS & no Sb/Br)	CU SN	Level-2-260C-1 YEAR	

(1) The marketing status values are defined as follows:
ACTIVE: Product device recommended for new designs.
LIFEBUY: TI has announced that the device will be discontinued, and a lifetime-buy period is in effect.
NRND: Not recommended for new designs. Device is in production to support existing customers, but TI does not recommend using this part in a new design.
PREVIEW: Device has been announced but is not in production. Samples may or may not be available.
OBSOLETE: TI has discontinued the production of the device.

(2) Eco Plan - The planned eco-friendly classification: Pb-Free (RoHS), Pb-Free (RoHS Exempt), or Green (RoHS & no Sb/Br) - please check http://www.ti.com/productcontent for the latest availability information and additional product content details.
TBD: The Pb-Free/Green conversion plan has not been defined.
Pb-Free (RoHS): TI's terms "Lead-Free" or "Pb-Free" mean semiconductor products that are compatible with the current RoHS requirements for all 6 substances, including the requirement that lead not exceed 0.1% by weight in homogeneous materials. Where designed to be soldered at high temperatures, TI Pb-Free products are suitable for use in specified lead-free processes.
Pb-Free (RoHS Exempt): This component has a RoHS exemption for either 1) lead-based flip-chip solder bumps used between the die and package, or 2) lead-based die adhesive used between the die and leadframe. The component is otherwise considered Pb-Free (RoHS compatible) as defined above.
Green (RoHS & no Sb/Br): TI defines "Green" to mean Pb-Free (RoHS compatible), and free of Bromine (Br) and Antimony (Sb) based flame retardants (Br or Sb do not exceed 0.1% by weight in homogeneous material)

(3) MSL, Peak Temp. -- The Moisture Sensitivity Level rating according to the JEDEC industry standard classifications, and peak solder temperature.

Important Information and Disclaimer: The information provided on this page represents TI's knowledge and belief as of the date that it is provided. TI bases its knowledge and belief on information provided by third parties, and makes no representation or warranty as to the accuracy of such information. Efforts are underway to better integrate information from third parties. TI has taken and continues to take reasonable steps to provide representative and accurate information but may not have conducted destructive testing or chemical analysis on incoming materials and chemicals. TI and TI suppliers consider certain information to be proprietary, and thus CAS numbers and other limited information may not be available for release.

In no event shall TI's liability arising out of such information exceed the total purchase price of the TI part(s) at issue in this document sold by TI to Customer on an annual basis.

OTHER QUALIFIED VERSIONS OF UC1823, UC3823 :

- Catalog: UC3823
- Military: UC1823

NOTE: Qualified Version Definitions:

- Catalog - TI's standard catalog product
- Military - QML certified for Military and Defense Applications

TAPE AND REEL INFORMATION

REEL DIMENSIONS

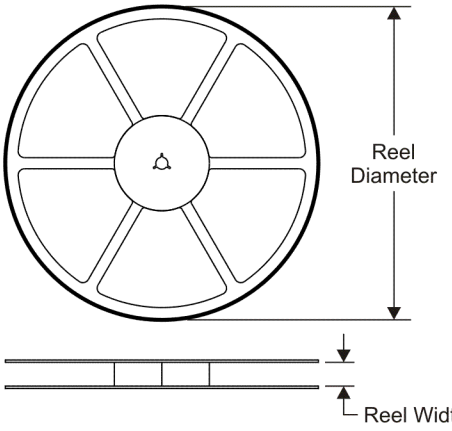

TAPE DIMENSIONS

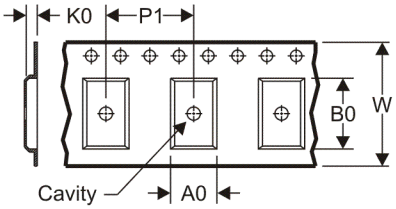

A0	Dimension designed to accommodate the component width
B0	Dimension designed to accommodate the component length
K0	Dimension designed to accommodate the component thickness
W	Overall width of the carrier tape
P1	Pitch between successive cavity centers

QUADRANT ASSIGNMENTS FOR PIN 1 ORIENTATION IN TAPE

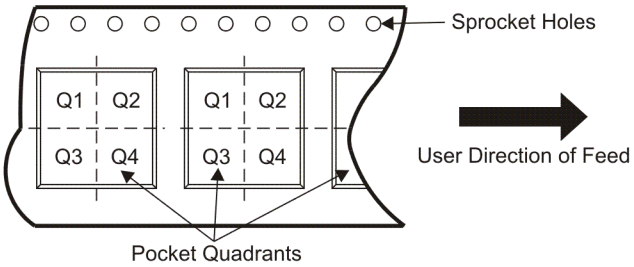

*All dimensions are nominal

Device	Package Type	Package Drawing	Pins	SPQ	Reel Diameter (mm)	Reel Width W1 (mm)	A0 (mm)	B0 (mm)	K0 (mm)	P1 (mm)	W (mm)	Pin1 Quadrant
UC2823DWTR	SOIC	DW	16	2000	330.0	16.4	10.85	10.8	2.7	12.0	16.0	Q1
UC2823QTR	PLCC	FN	20	1000	330.0	16.4	10.3	10.3	4.9	12.0	16.0	Q1
UC3823DWTR	SOIC	DW	16	2000	330.0	16.4	10.85	10.8	2.7	12.0	16.0	Q1
UC3823QTR	PLCC	FN	20	1000	330.0	16.4	10.3	10.3	4.9	12.0	16.0	Q1

TAPE AND REEL BOX DIMENSIONS

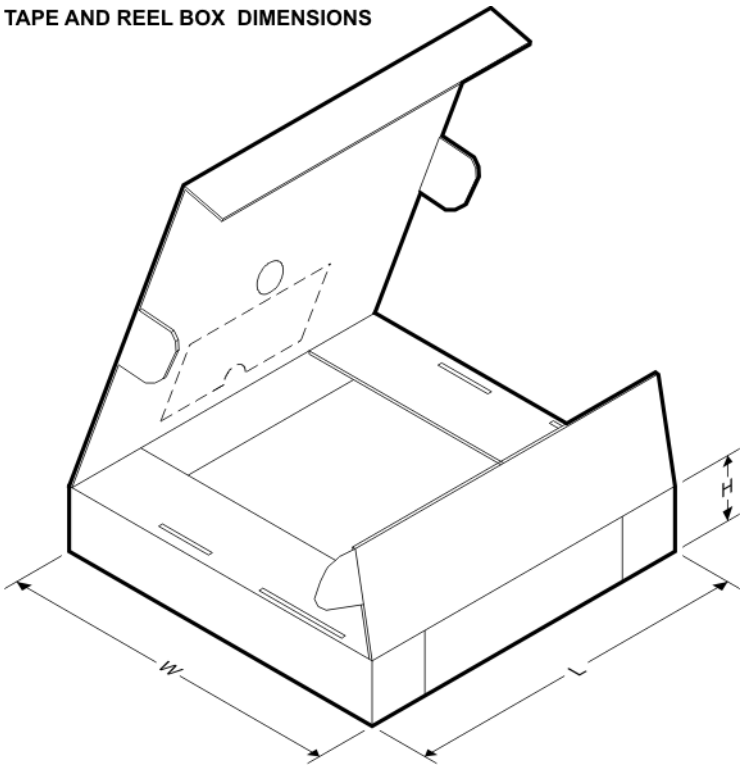

*All dimensions are nominal

Device	Package Type	Package Drawing	Pins	SPQ	Length (mm)	Width (mm)	Height (mm)
UC2823DWTR	SOIC	DW	16	2000	346.0	346.0	33.0
UC2823QTR	PLCC	FN	20	1000	346.0	346.0	33.0
UC3823DWTR	SOIC	DW	16	2000	346.0	346.0	33.0
UC3823QTR	PLCC	FN	20	1000	346.0	346.0	33.0

IMPORTANT NOTICE

Texas Instruments Incorporated and its subsidiaries (TI) reserve the right to make corrections, modifications, enhancements, improvements, and other changes to its products and services at any time and to discontinue any product or service without notice. Customers should obtain the latest relevant information before placing orders and should verify that such information is current and complete. All products are sold subject to TI's terms and conditions of sale supplied at the time of order acknowledgment.

TI warrants performance of its hardware products to the specifications applicable at the time of sale in accordance with TI's standard warranty. Testing and other quality control techniques are used to the extent TI deems necessary to support this warranty. Except where mandated by government requirements, testing of all parameters of each product is not necessarily performed.

TI assumes no liability for applications assistance or customer product design. Customers are responsible for their products and applications using TI components. To minimize the risks associated with customer products and applications, customers should provide adequate design and operating safeguards.

TI does not warrant or represent that any license, either express or implied, is granted under any TI patent right, copyright, mask work right, or other TI intellectual property right relating to any combination, machine, or process in which TI products or services are used. Information published by TI regarding third-party products or services does not constitute a license from TI to use such products or services or a warranty or endorsement thereof. Use of such information may require a license from a third party under the patents or other intellectual property of the third party, or a license from TI under the patents or other intellectual property of TI.

Reproduction of TI information in TI data books or data sheets is permissible only if reproduction is without alteration and is accompanied by all associated warranties, conditions, limitations, and notices. Reproduction of this information with alteration is an unfair and deceptive business practice. TI is not responsible or liable for such altered documentation. Information of third parties may be subject to additional restrictions.

Resale of TI products or services with statements different from or beyond the parameters stated by TI for that product or service voids all express and any implied warranties for the associated TI product or service and is an unfair and deceptive business practice. TI is not responsible or liable for any such statements.

TI products are not authorized for use in safety-critical applications (such as life support) where a failure of the TI product would reasonably be expected to cause severe personal injury or death, unless officers of the parties have executed an agreement specifically governing such use. Buyers represent that they have all necessary expertise in the safety and regulatory ramifications of their applications, and acknowledge and agree that they are solely responsible for all legal, regulatory and safety-related requirements concerning their products and any use of TI products in such safety-critical applications, notwithstanding any applications-related information or support that may be provided by TI. Further, Buyers must fully indemnify TI and its representatives against any damages arising out of the use of TI products in such safety-critical applications.

TI products are neither designed nor intended for use in military/aerospace applications or environments unless the TI products are specifically designated by TI as military-grade or "enhanced plastic." Only products designated by TI as military-grade meet military specifications. Buyers acknowledge and agree that any such use of TI products which TI has not designated as military-grade is solely at the Buyer's risk, and that they are solely responsible for compliance with all legal and regulatory requirements in connection with such use.

TI products are neither designed nor intended for use in automotive applications or environments unless the specific TI products are designated by TI as compliant with ISO/TS 16949 requirements. Buyers acknowledge and agree that, if they use any non-designated products in automotive applications, TI will not be responsible for any failure to meet such requirements.

Following are URLs where you can obtain information on other Texas Instruments products and application solutions:

Products		**Applications**	
Audio	www.ti.com/audio	Communications and Telecom	www.ti.com/communications
Amplifiers	amplifier.ti.com	Computers and Peripherals	www.ti.com/computers
Data Converters	dataconverter.ti.com	Consumer Electronics	www.ti.com/consumer-apps
DLP® Products	www.dlp.com	Energy and Lighting	www.ti.com/energy
DSP	dsp.ti.com	Industrial	www.ti.com/industrial
Clocks and Timers	www.ti.com/clocks	Medical	www.ti.com/medical
Interface	interface.ti.com	Security	www.ti.com/security
Logic	logic.ti.com	Space, Avionics and Defense	www.ti.com/space-avionics-defense
Power Mgmt	power.ti.com	Transportation and Automotive	www.ti.com/automotive
Microcontrollers	microcontroller.ti.com	Video and Imaging	www.ti.com/video
RFID	www.ti-rfid.com		
OMAP Mobile Processors	www.ti.com/omap		
Wireless Connectivity	www.ti.com/wirelessconnectivity		

TI E2E Community Home Page e2e.ti.com

Mailing Address: Texas Instruments, Post Office Box 655303, Dallas, Texas 75265
Copyright © 2011, Texas Instruments Incorporated